REVISIONS			
LTR	DESCRIPTION	DATE	APPROVAL
Ø	Initiate composite drawing.	01/05/10	

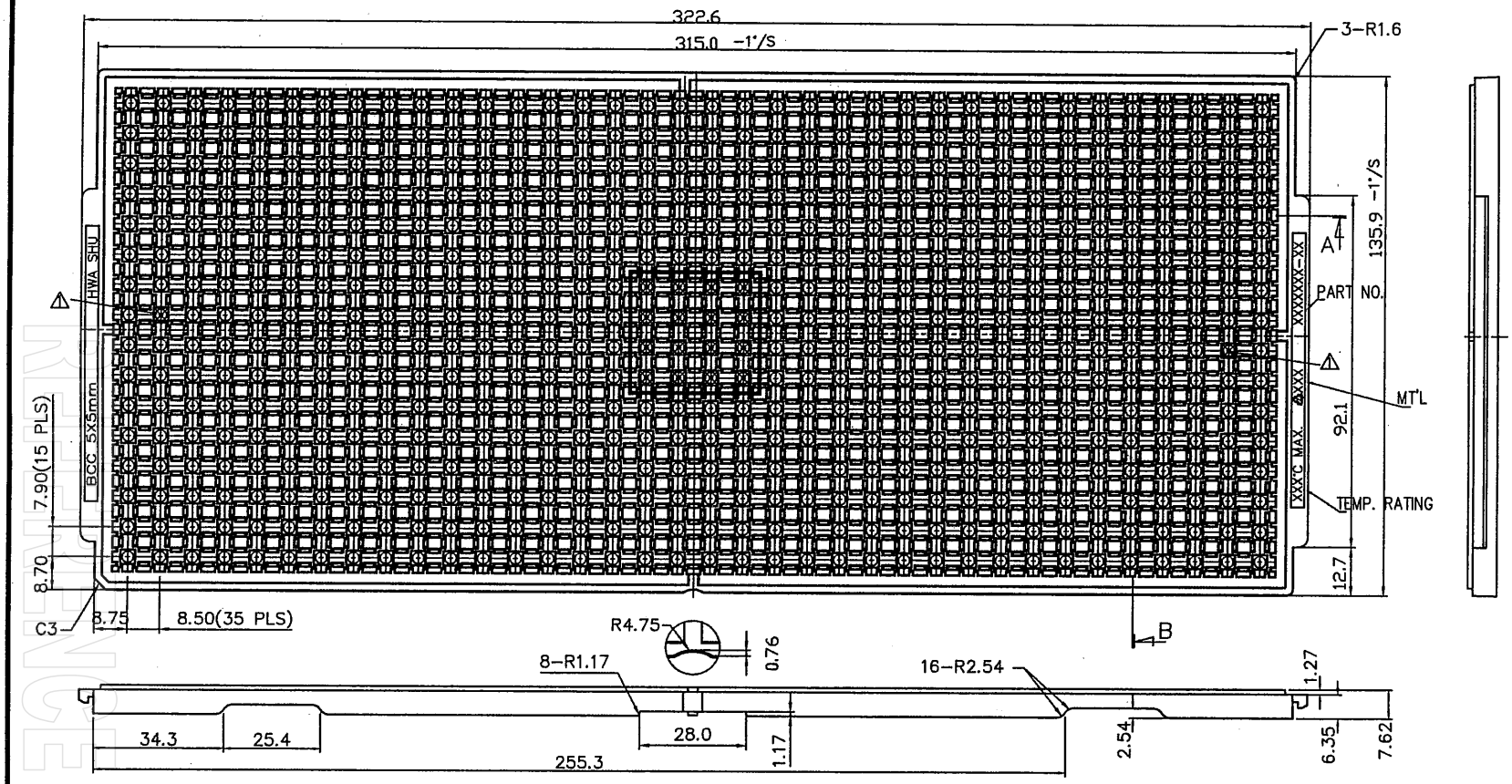

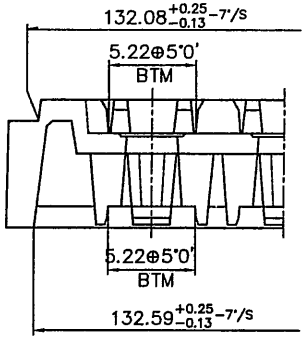

SECTION B- (4/1)

NOTES :

1. (S.R. OHM/SQ.) MEANS SURFACE ELECTRIC RESISTIVITY OF THE TRAY.
2. THE MOLDED TRAY'S MATERIAL SHALL BE RIGID ENOUGH TO AVOID DAMAGE TO THE COMPONENTS DURING HANDLING,LOADING,BACKING,TESTING, SHIPPING AND PLACING.
3. TEMP.'C IS THE MAXIMUM OPERATING TEMPERATURE THE EMPTY TRAY CAN BE SUBJECTED TO FOR 48 CONTINOUS HOURS BAKING WITHOUT VIOLATING THE DIMENSIONAL TOLERANCE OF THE TRAY.
4. TRAYS ARE STACKABLE WITHOUT INTERFERENCE AND WILL NOT STICK TOGETHER DURING UNSTACKING OPERATION.
5. WARPAGE IS WITHIN 0.76 mm.
6. THE CELLS MARKED WITH CROSS SYMBOL ARE FOR VACCUM PICKUP AREA.
7. TOTAL USABLE CELLS 16X36=576.
8. THE TRAY MEETS JEDEC STANDARD.

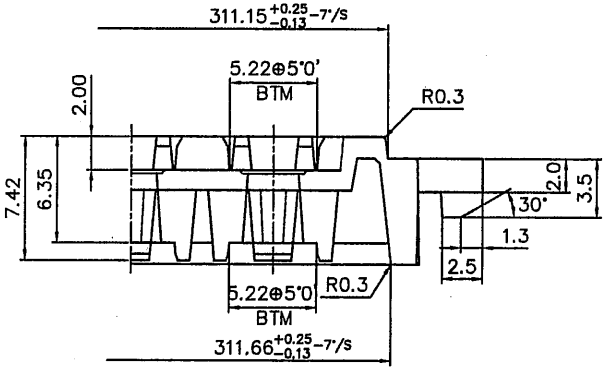

SECTION A- (4/1)

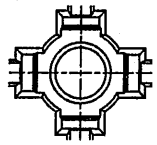

VENDOR	HWA SHU ENTERPRISE CO., LTD.				
	< 1X10^7	PPE	BLACK	150°C MAX.	EAG0505-10
REMARK	[1] S.R OHM/SQ	MT'L	COLOR	[3] TEMP.°C	PART NO.

LINEAR TECHNOLOGY
1630 McCarthy Blvd
Milpitas, CA 95035-7487
(408) 432-1900

PIECE PART DRAWING
BCC 5mm x 5mm TRAY

APPROVALS	DATE	DRAWING NO. 50-8060		
DRAWN A. DELA CRUZ		TOLERANCES UNLESS OTHERWISE SPECIFIED FRACTIONS N/A DEC. 0.2mm ANGLES 1/2		
CHECKED W. LOH	1/5/10	SCALE N/A	SIZE A	SHEET 1 OF 1