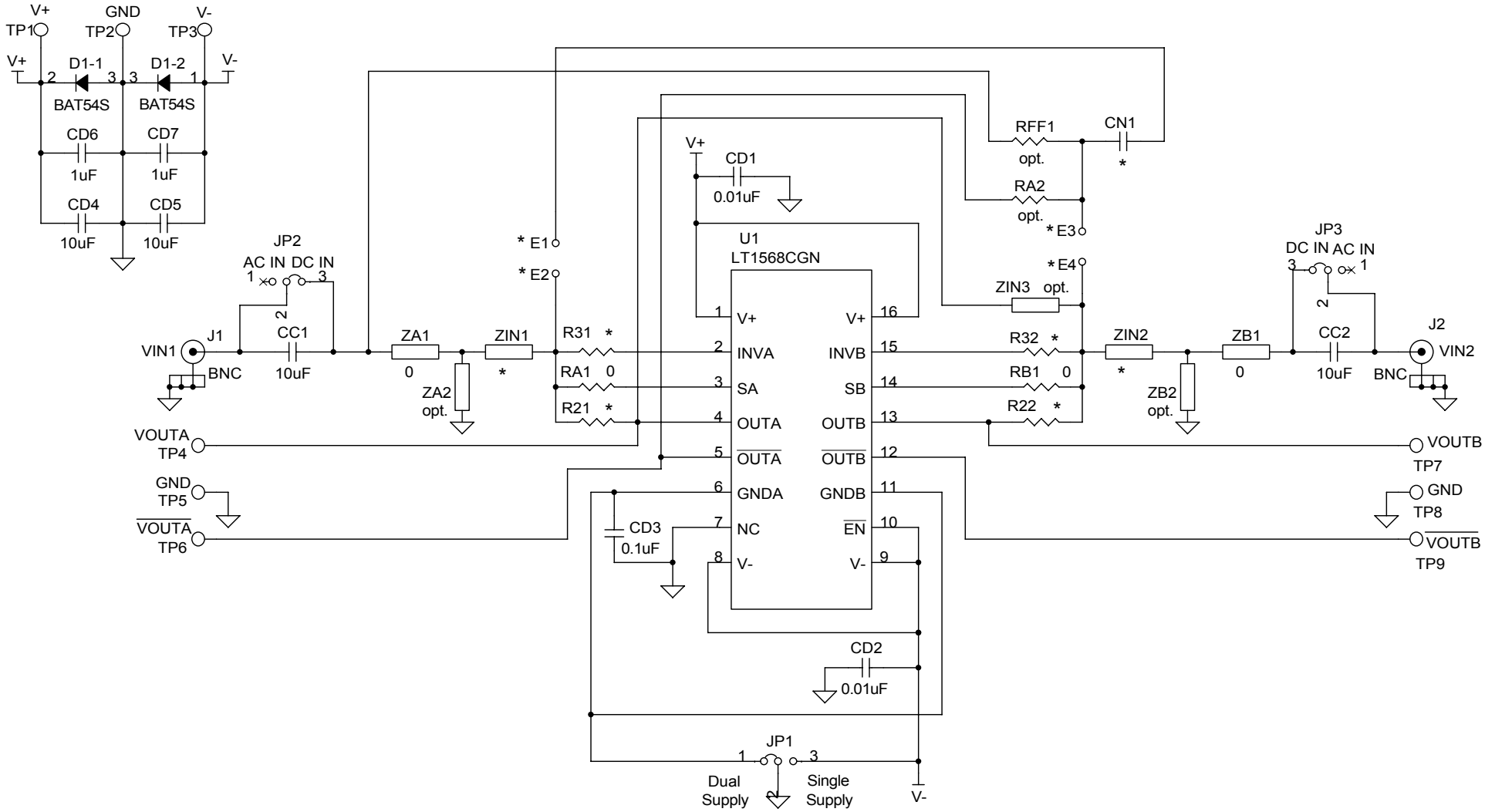

* VERSION TABLE

ASSEMBLY TYPE	DESCRIPTION	ZIN1	ZIN2	ZIN3	R21, R22, R31, R32	RA2	CN1	E1-E2, E3-E4
DC675A-A	Universal Filter	opt.	opt.	opt.	opt.	opt.	opt.	not Installed
DC675A-B	Dual 2.5MHz Lowpass Filter	511	511	opt.	511	opt.	opt.	not Installed
DC675A-C	Single 2.5MHz Lowpass Filter	324	opt.	opt.	324	324	82pF	Installed
DC675A-D	Single 1MHz Bandpass Filter	68pF	opt.	68pF	1.05k	opt.	opt.	not Installed

* E1,E2 and E3,E4 are holes for jumper wires. (optional, Part #: 3M, 923345-04-C)

CUSTOMER NOTICE

LINEAR TECHNOLOGY HAS MADE A BEST EFFORT TO DESIGN A CIRCUIT THAT MEETS CUSTOMER-SUPPLIED SPECIFICATIONS; HOWEVER, IT REMAINS THE CUSTOMER'S RESPONSIBILITY TO VERIFY PROPER AND RELIABLE OPERATION IN THE ACTUAL APPLICATION. COMPONENT SUBSTITUTION AND PRINTED CIRUIT BOARD LAYOUT MAY SIGNIFICANTLY AFFECT CIRCUIT PERFORMANCE OR RELIABILITY. CONTACT LINEAR TECHNOLOGY APPLICATIONS ENGINEERING FOR ASSISTANCE.

THIS CIRCUIT IS PROPRIETARY TO LINEAR TECHNOLOGY AND SUPPLIED FOR USE WITH LINEAR TECHNOLOGY PARTS.

CONTRACT NO.

APPROVALS		DATE
DRAWN	June Wu	4/15/03
CHECKED		
APPROVED		
ENGINEER	Philip K.	4/15/03
DESIGNER		

Thursday, January 15, 2004

LINEAR TECHNOLOGY
1630 McCarthy Blvd.
Milpitas, CA 95035
Phone: (408)432-1900
Fax: (408)434-0507

TITLE
LT1568CGN, Active RC,
Filter Building Block(200kHz to 10MHz)

SIZE	CAGE CODE	DWG NO	REV
		DC675A	A

SCALE: FILENAME: SHEET 1 OF 1