LTC2978: Programming Board for Octal Digital Power Supply Manager with EEPROM

DESCRIPTION

Demonstration circuit DC1508A contains the circuitry needed to program and verify the EEPROM of the LTC2978. That is its only purpose. The DC1508A is shipped with an LTC2978 installed in the clamshell style programming socket. The EEPROM contains the factory default configuration. The LTpowerPlay™ *.proj file that corresponds to the factory default can be found in the GUI.

In order to properly verify the contents of the EEPROM, download and install the LTpowerPlay software (GUI).

http://www.ltpowerplay.com/download/

You also need a Linear Technology USB to I^{2}C/SMBus/PMBus Controller. DC1427A or DC1613.

DEMO SYSTEM REQUIRED HARDWARE

- Windows PC
- USB to I^{2}C/SMBus/PMBus Controller (Either DC1427A or DC1613)
- DC1508A

DEMO SYSTEM REQUIRED SOFTWARE

LTpowerPlay

LTC2978 Features

- I^{2}C/SMBus Communication
- Fault Logging to Internal EEPROM
- PMBus Compliant
- Differential Input, 15-Bit ΔΣ ADC with Less than ±0.25% of Total Unadjusted Error Using On-Chip Reference
- Monitors Eight Output Channels and One Input Voltage
- Programmable Watchdog Timer
- 8-Channel Sequencer
- Eight 10-Bit OV/UV Voltage Supervisors
- Eight 10-Bit Margin/Trim DACs with Soft-Connect
- A Closed Loop Digital Servo Accurately Trims the Outputs
- Supports Multichannel Fault Management
- Programmable Fault Responses
- On-Chip Digital Temperature Sensor

Design files for this circuit board are available at www.linear.com/demo.

LT, LTC, LTM, Linear Technology, the Linear logo are registered trademarks and LTpowerPlay is a trademark of Linear Technology Corporation. All other trademarks are the property of their respective owners.

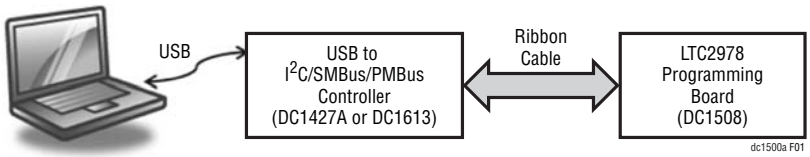

Figure 1. LTC2978 Programming Setup Using DC1508A

QUICK START PROCEDURE

Demonstration circuit 1508A makes it easy to program and verify the EEPROM contents of the LTC2978.

Download and install the LTpowerPlay software at www.ltpowerplay.com/download/

Place jumpers and switches in the following default positions:

JP1: ON

SW1, SW2: ON

Open the lid of the socket. Verify there is an IC inside. See Figure 2.

Close lid. It will snap into place.

Removal and insertion of the IC should be done with either a tweezers or a vacuum suction device.

Plug one end of USB cable to your PC. Plug other end of USB cable into I^2C/SMBus/PMBus Controller.

If you have a DC1427A, plug the ribbon cable into J4. See Figure 3.

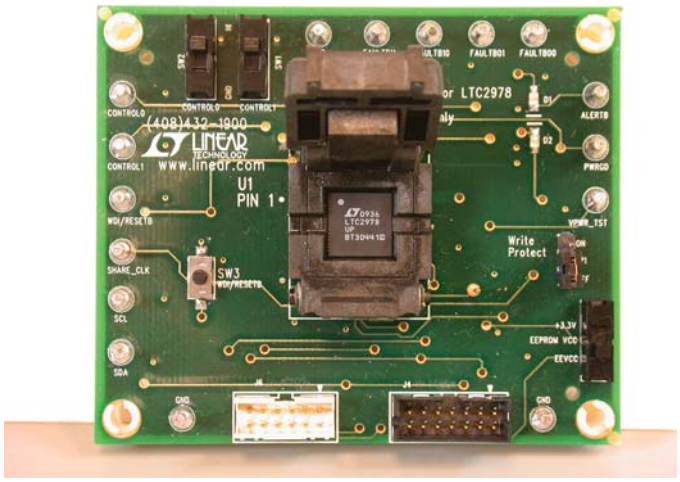

Figure 2. Open Shell. Verify IC Installed

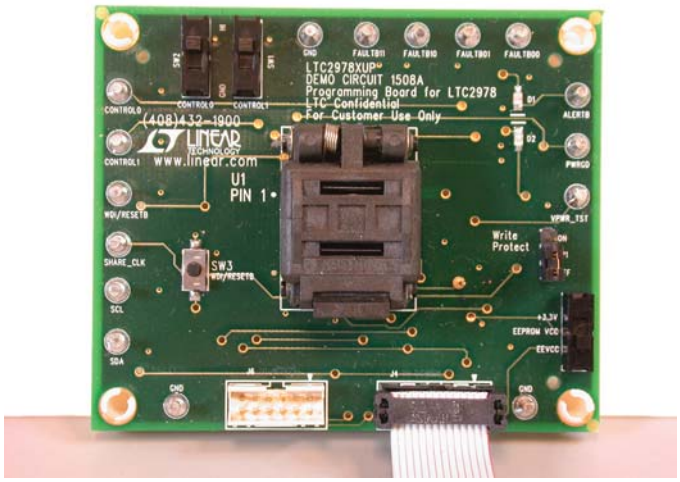

Figure 3. DC1427A Ribbon Cable Installation

QUICK START PROCEDURE

If you have a DC1613, plug the ribbon cable into J6. See Figure 4.

On your PC, launch LTpowerPlay. LTpowerPlay will identify the DC1508A and launch the appropriate GUI.

Follow the step by step directions in the GUI.

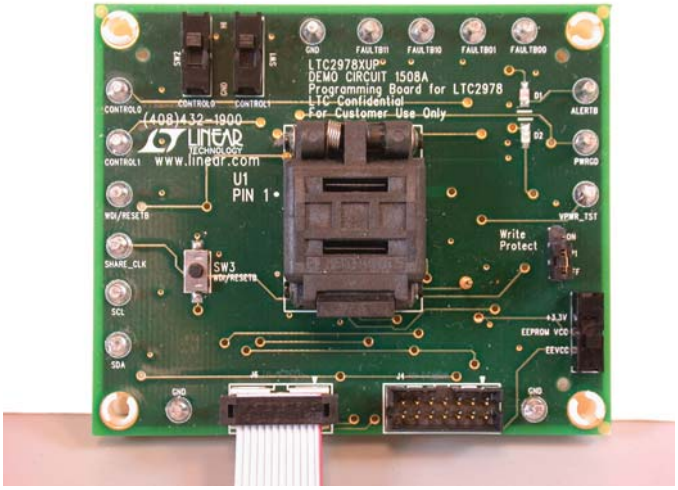

Figure 4. DC1613 Ribbon Cable Installation

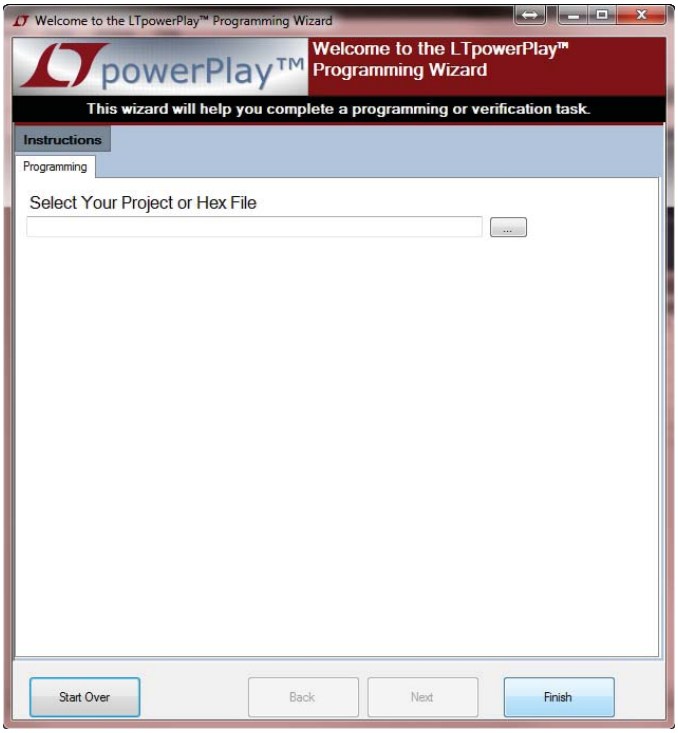

Figure 5. DC1508A Programming GUI

Powering Down the Board Between Programming Operations

Disconnect the USB cable from the DC1427A/DC1613 before removing or inserting an LTC2978 into the programming socket.

What You Can Do with the DC1508A

1. Compare the contents of the EEPROM in the LTC2978 against your Project or Hex File
2. Reprogram the contents of the EEPROM in the LTC2978 using your Project or Hex File
3. Verify the EEPROM within the DC1508A contains the factory defaults

   a. From the DC1508A Programming GUI, load the factory defaults project file. The file is located at:

   C:\Program Files\Linear Technology\LTpowerplay\project files\ltc2978\01_2978_datasheet_defaults.proj

   b. Click the Verify button

PARTS LIST

ITEM	QUANTITY	REFERENCE DESIGNATOR	DESCRIPTION	MANUFACTURER, PART NUMBER
1	4	C8, C9, C10, C11	Capacitor, Ceramic, 0.10µF 10% 16V X7R 0603	AVX, 0603YC104KAT2A
2	3	C12, C16, C17	Capacitor, Ceramic, 0.01µF 10% 16V X7R 0603	AVX, 0603YC103KAT2A
3	1	C18	Capacitor, Tantalum, 1µF 10% 50V SMD	Vishay/Sprague, T83C105K050EZZL
4	1	D1	LED, Red S-Type Gull Wing 2.03V SMD	Panasonic, LN1271RTR
5	1	D2	LED, Green S-Type Low Current SMD	Panasonic, LN1371SGTRP
6	1	JP1	Connector, Header, Vertical 0.100 Male 1 Row, 3 Position	FCI, 68000-103HLF
7	1	J4	Connector, Header, 14 Position 2mm Male Vertical Gold	Molex, 87831-1420
8	1	J6	Connector, Header, 12 Position 2mm Male Vertical Gold	FCI Con. Corp,. 98414-G06-12ULF
9	1	Q1	MOSFET, N-Channel, 60V 115MA SOT-23	Fairchild Semi., 2N7002
10	0	R83, R84, R85	Optional, Resistor, 0Ω 1/10W 5% 0603 SMD	Vishay, CRCW06030000Z0EA
11	1	R70	Resistor, 0Ω 1/10W 5% 0805 SMD	Vishay, CRCW08050000Z0EA
12	11	R1, R2, R4 to R7, R11, R77 to R80	Resistor, 10kΩ 1/10W 1% 0603 SMD	Vishay, CRCW060310K0FKEA
13	2	R8, R10	Resistor, 200Ω 1/10W 1% 0603 SMD	Vishay, CRCW0603200RFKEA
14	3	R9, R63, R64	Resistor, 10Ω 1/10W 1% 0603 SMD	Vishay, CRCW060310R0FKEA
15	3	R12, R13, R14	Resistor, 4.99kΩ 1/10W 1% 0603 SMD	Vishay, CRCW06034K99FKEA
16	2	R59, R81	Resistor, 100Ω 1/10W 1% 0603 SMD	Vishay, CRCW0603100RFKEA
17	2	R75, R76	Resistor, 1kΩ 1/10W 1% 0603 SMD	Vishay, CRCW06031K00FKEA
18	0	R82	Optional, Resistor, 1kΩ 1/10W 1% 0603 SMD	Vishay, CRCW06031K00FKEA
19	0	SW4	Optional, Switch, Slide SPDT 30V, 2A PC MNT	E-Switch, EG1218
20	2	SW1, SW2	Switch, Slide SPDT 30V.2A PC MNT	E-Switch, EG1218
21	1	SW3	Switch, Tact Silver 180GF Gull Wing	C&K Components, KSR211GLFS
22	16	TP1 to TP4, TP6 to TP8, TP10 to TP13, TP15, TP17 to TP20	Turret, Term Solder 0.156" 0.066" L	Mill-Max, 2308-2-00-80-00-00-07-0
23	1	TP25	Solder Mount PCB Pin 0.300" 0.040" L	Mill-Max, 3111-3-00-34-00-00-08-0
24	1	U1	Socket through Hole Spring Loaded Lid QFN 9mm × 9mm	Plastronics, 64QN50S19090-A
25	1	U2	IC, Serial EEPROM 2k 2.2V 8-TSSOP	Microchip, 24LC025-I/ST
26	4	MTH1, MTH2, MTH3, MTH4	Support Post, Nylon Snap-In 1/4"	Keystone, 8831
27	1	Shunt	Connector, Shunt Dual Beam 30AU PCB	Tyco Electronics, 390088-1
28	1	PCB	FAB, PCB, DC1508A	Demo Circuit DC1508a
29	2	STENCIL	Stencil, DC1508A	Stencil, DC1508A

Note: This board is only used to program LTC2978UP.
For a complete listing of components required to operate the LTC2978, consult the data sheet and the BOM of the DC1360A.
Insure manufacturers dummy package is installed prior to soldering socket to PCB.

SCHEMATIC DIAGRAM

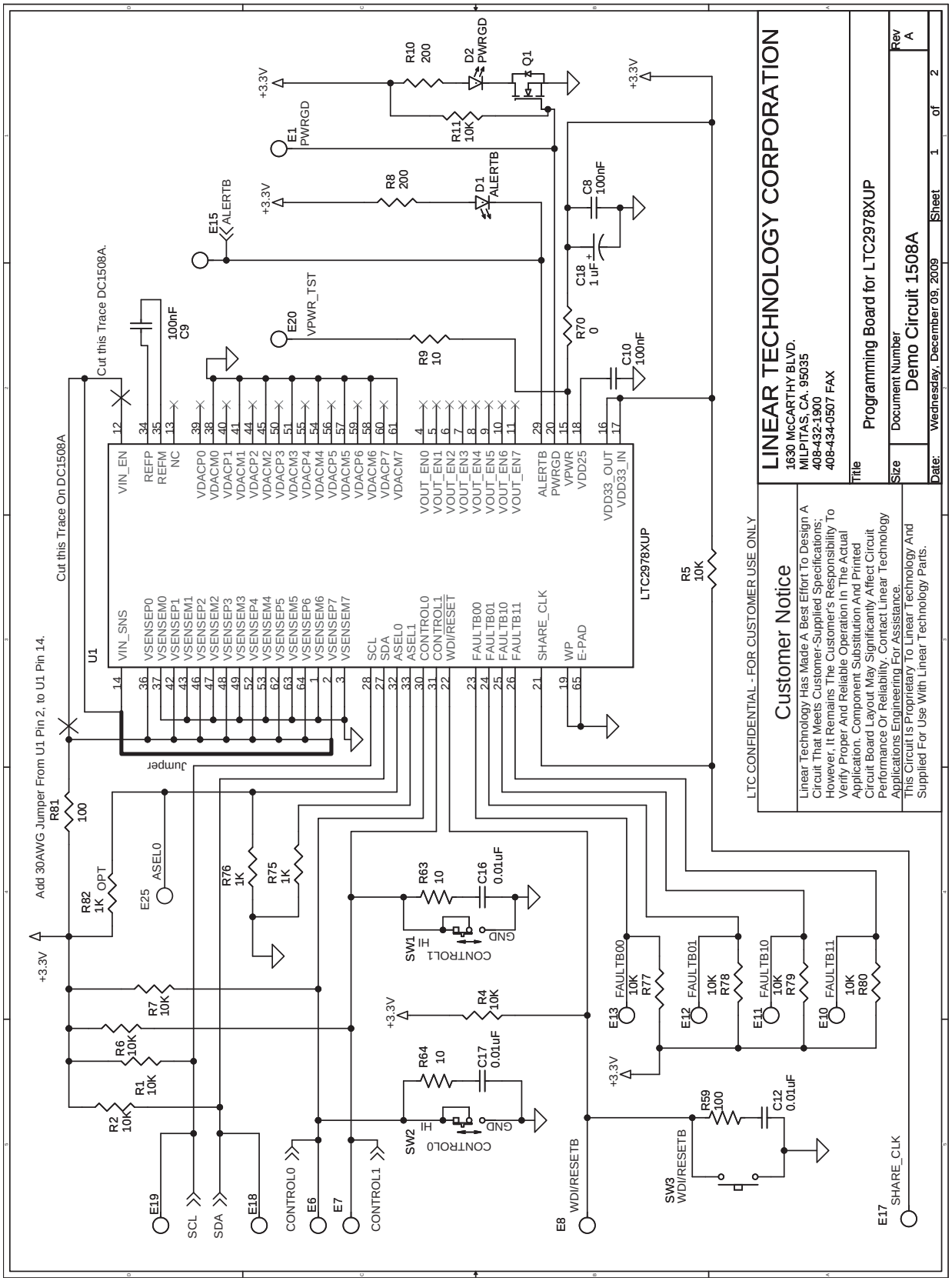

SCHEMATIC DIAGRAM

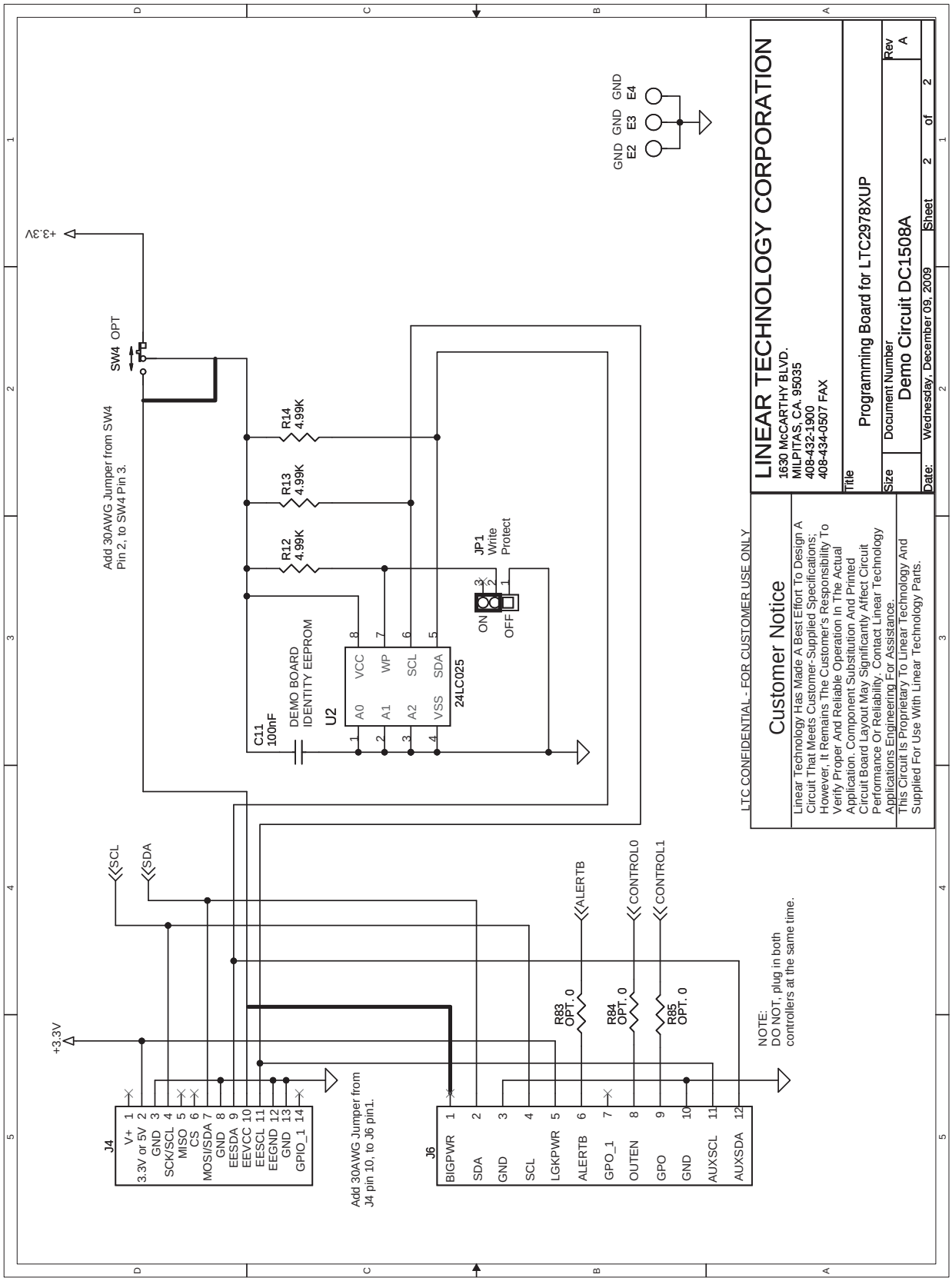

PCB LAYOUT AND FILM

Top Assembly

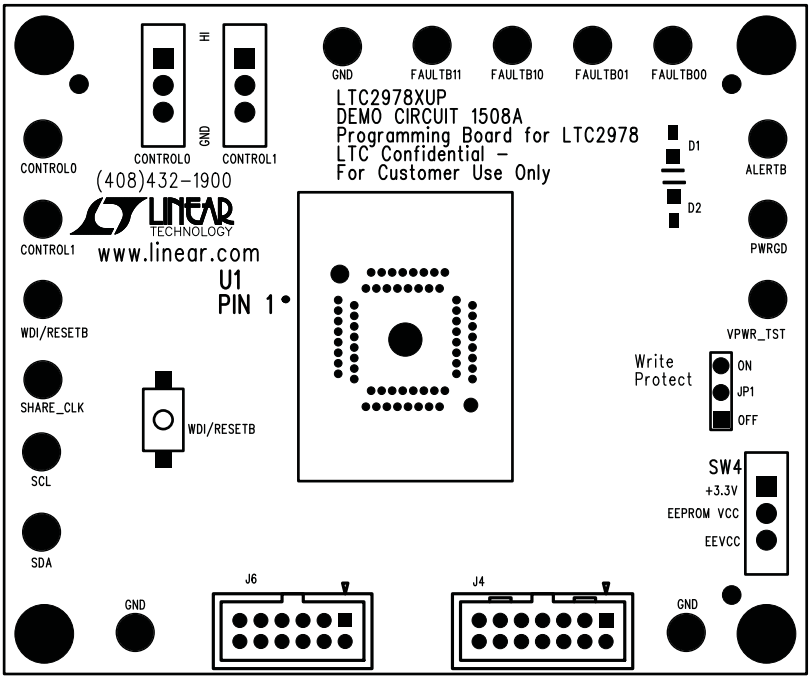

Bottom Assembly

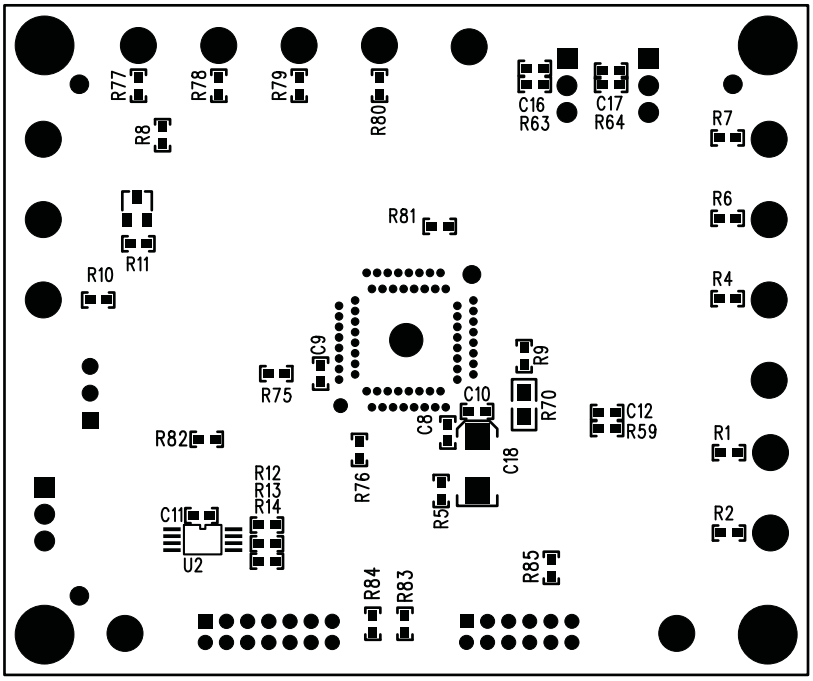

Information furnished by Linear Technology Corporation is believed to be accurate and reliable. However, no responsibility is assumed for its use. Linear Technology Corporation makes no representation that the interconnection of its circuits as described herein will not infringe on existing patent rights.

DEMONSTRATION BOARD IMPORTANT NOTICE

Linear Technology Corporation (LTC) provides the enclosed product(s) under the following **AS IS** conditions:

This demonstration board (DEMO BOARD) kit being sold or provided by Linear Technology is intended for use for **ENGINEERING DEVELOPMENT OR EVALUATION PURPOSES ONLY** and is not provided by LTC for commercial use. As such, the DEMO BOARD herein may not be complete in terms of required design-, marketing-, and/or manufacturing-related protective considerations, including but not limited to product safety measures typically found in finished commercial goods. As a prototype, this product does not fall within the scope of the European Union directive on electromagnetic compatibility and therefore may or may not meet the technical requirements of the directive, or other regulations.

If this evaluation kit does not meet the specifications recited in the DEMO BOARD manual the kit may be returned within 30 days from the date of delivery for a full refund. THE FOREGOING WARRANTY IS THE EXCLUSIVE WARRANTY MADE BY THE SELLER TO BUYER AND IS IN LIEU OF ALL OTHER WARRANTIES, EXPRESSED, IMPLIED, OR STATUTORY, INCLUDING ANY WARRANTY OF MERCHANTABILITY OR FITNESS FOR ANY PARTICULAR PURPOSE. EXCEPT TO THE EXTENT OF THIS INDEMNITY, NEITHER PARTY SHALL BE LIABLE TO THE OTHER FOR ANY INDIRECT, SPECIAL, INCIDENTAL, OR CONSEQUENTIAL DAMAGES.

The user assumes all responsibility and liability for proper and safe handling of the goods. Further, the user releases LTC from all claims arising from the handling or use of the goods. Due to the open construction of the product, it is the user's responsibility to take any and all appropriate precautions with regard to electrostatic discharge. Also be aware that the products herein may not be regulatory compliant or agency certified (FCC, UL, CE, etc.).

No License is granted under any patent right or other intellectual property whatsoever. **LTC assumes no liability for applications assistance, customer product design, software performance, or infringement of patents or any other intellectual property rights of any kind.**

LTC currently services a variety of customers for products around the world, and therefore this transaction **is not exclusive**.

Please read the DEMO BOARD manual prior to handling the product. Persons handling this product must have electronics training and observe good laboratory practice standards. **Common sense is encouraged**.

This notice contains important safety information about temperatures and voltages. For further safety concerns, please contact a LTC application engineer.

Mailing Address:

Linear Technology

1630 McCarthy Blvd.

Milpitas, CA 95035

Copyright © 2004, Linear Technology Corporation

Linear Technology Corporation
1630 McCarthy Blvd., Milpitas, CA 95035-7417
(408) 432-1900 • FAX: (408) 434-0507 • www.linear.com

LT 0510 • PRINTED IN USA

© LINEAR TECHNOLOGY CORPORATION 2010