| REVISION RECORD | | |
|---|---|---|
| REV | DESCRIPTION | DATE |
| 0 | INITIAL RELEASE | 06/02/98 |
| A | PAGE 11, FIGURES 6, 7, CHANGED $\theta ja$ AND $\theta jc$. | 09/24/99 |
| B | PAGE 3, PARAGRAPH 3.8 CHANGED VERBIAGE ADDED "HEREIN" AFTER TABLE 1.<br>PAGE 4, PARAGRAPH 5.0 CHANGED VERBIAGE ADDED "HEREIN" AFTER TABLE 3.<br>PARAGRAPH 5.2 ADDED "HEREIN" AFTER TABLE 2.<br>PARAGRAPH 6.2 ADDED "HEREIN" AFTER TABLE 3.<br>PAGE 5, 6.3 CHANGED VERBIAGE ADDED "HEREIN" AFTER TABLE 3. | 03/07/01 |
| C | • REMOVED THE "M" FROM THE DEVICE TITLE, THROUGHOUT THE SPEC, TO MATCH THE DATA SHEET AND RPL.<br>• PAGE 3, PARAGRAPH 3.6 CHANGED TO REFLECT ONLY FIGURE 1 FOR BOTH DEVICE OPTIONS.<br>PARAGRAPH 3.7.1, CHANGED THE DOSAGE RATE FROM "APPROXIMATELY 20 RADS PER SECOND" TO "LESS THAN OR EQUAL TO 10 RADS PER SECOND".<br>PARAGRAPH 3.7.3, NOW REFLECTS TOTAL DOSE BIAS AS FIGURE 2.<br>• PAGE 4, PARAGRAPH 5.5, NOW REFLECTS BURN-IN CIRCUITS AS FIGURES 3 AND 4.<br>PARAGRAPH 5.6, NOW REFLECTS CASE OUTLINES AS FIGURES 5 AND 6.<br>PARAGRAPH 5.7, NOW REFLECTS TERMINAL CONNECTIONS AS FIGURES 7 AND 8.<br>PARAGRAPH 6.1 CHANGED QUALITY ASSURANCE PROVISIONS TO STATE THAT LTC IS QML CERTIFIED AND THAT RAD HARD CANDIDATES ARE ASSEMBLED ON QUALIFIED CLASS S MANUFACTURING LINES.<br>• PAGES 6 THROUGH 12, ALL FIGURE TITLES CHANGED TO HAVE DEVICE OPTIONS AND PACKAGE TYPES AT TOP OF PAGE, AND HAVE ALL FIGURES AT BOTTOM OF PAGE.<br>• CONVERSION OF SPECIFICATION FROM WORD PERFECT TO MICROSOFT WORD. | 07/16/02 |

**CAUTION: ELECTROSTATIC DISCHARGE SENSITIVE PART**

| REVISION | PAGE NO. | 1 | 2 | 3 | 4 | 5 | 6 | 7 | 8 | 9 | 10 | 11 | 12 | 13 | 14 | 15 | 16 |
|---|---|---|---|---|---|---|---|---|---|---|---|---|---|---|---|---|---|
| INDEX | REVISION | **K** | **K** | **K** | **K** | **K** | **K** | **K** | **K** | **K** | **K** | **K** | **K** | **K** | **K** | **K** | **K** |

| | | | | | | | |
|---|---|---|---|---|---|---|---|
| | | | | **LINEAR TECHNOLOGY CORPORATION MILPITAS, CALIFORNIA** | | | |
| | ORIG | | | | | | |
| | DSGN | | | TITLE: **MICROCIRCUIT, LINEAR, RH1086BHK, 0.5A AND RH1086BKK, 1.5A, LOW DROPOUT POSITIVE REGULATOR DICE** | | | |
| | ENGR | | | | | | |
| | MFG | | | | | | |
| | CM | | | | | | |
| | QA | | | SIZE | CAGE CODE | DRAWING NUMBER | REV |
| | PROG | | | | **64155** | **05-08-5134** | **K** |
| APPLICATION | FUNCT | SIGNOFFS | DATE | CONTRACT: | | | |

# FOR OFFICIAL USE ONLY

| REVISION RECORD | | |
|---|---|---|
| REV | DESCRIPTION | DATE |
| D | CHANGED RH1086H TO RH1086BHK AND RH1086K TO RH1086BKK THROUGHOUT SPEC. | 10/28/03 |
| E | • PAGE 3, CHANGED INITIAL RATE OF RADS TO 240 RADS/SEC. | 03/22/05 |
| F | • PAGE 4, PARAGRAPH 3.7.1 CHANGED VERBIAGE.<br>• PAGE 5, PARAGRAPH 5.8 CHANGED ALLOY 42 TO ALLOY 52 TO3 PACKAGE REQUIREMENT. | 05/21/08 |
| G | • PAGE 10, FIGURE 4 STATIC BURN-IN CIRCUIT CHANGED TO 04-06-0302 PER. ENG.<br>• PAGE 16, CHANGED RH CANNED SAMPLE TABLE III FOR QUALIFYING DICE SALES ADDED TEMPERATURE CYCLE, CONSTANT ACCELERATION & REMOVED PIND TEST. | 09/11/09 |
| H | • UPDATED REFERENCE VOLTAGE vs. POST IRRADIATION LIMITS IN TABLE II ELECTRICAL CHARACTERISTICS | 12/07/10 |
| I | • PAGE 15, UPDATED REFERENCE POST IRRADIATION LIMITS IN TABLE II ELECTRICAL CHARACTERISTICS TO ADD MISSING DROPOUT VOLTAGE FOR “H” PACKAGE. | 05/02/11 |
| J | Page 3, amended section 3.3 Special Handling of Dice to more accurately describe our current procedures and requirements. | 04/05/12 |
| **K** | **Page 11, Changed RH Canned Sample Table for Qualifying Dice Sales: Subgroup 6 Sample Size Series changed from 45 (3) to 65 (3). First note had the Sample Size Series from “15%” to “10%”.** | **7/2/13** |

# FOR OFFICIAL USE ONLY

1.0 SCOPE:

1.1 This specification defines the performance and test requirements for a microcircuit processed to a space level manufacturing flow.

2.0 APPLICABLE DOCUMENTS:

2.1 Government Specifications and Standards: the following documents listed in the Department of Defense Index of Specifications and Standards, of the issue in effect on the date of solicitation, form a part of this specification to the extent specified herein.

SPECIFICATIONS:

| | |
|---|---|
| MIL-PRF-38535 | Integrated Circuits (Microcircuits) Manufacturing, General Specification for |
| MIL-STD-883 | Test Method and Procedures for Microcircuits |
| MIL-STD-1835 | Microcircuits Case Outlines |

2.2 Order of Precedence: In the event of a conflict between the documents referenced herein and the contents of this specification, the order of precedence shall be this specification, MIL-PRF-38535 and other referenced specifications.

3.0 REQUIREMENTS:

3.1 General Description: This specification details the requirements for the **RH1086BHK, 0.5A and RH1086BKK, 1.5A**, Low Dropout Positive Regulator Dice and Element Evaluation Test Samples, processed to space level manufacturing flow as specified herein.

3.2 Part Number:

3.2.1 OPTION 1 – RH1086BHK Dice

3.2.2 OPTION 2 – RH1086BKK Dice

3.3 **Special Handling of Dice:** Rad Hard dice require special handling as compared to standard IC dice. Rad Hard dice are susceptible to surface damage due to the absence of silicon nitride passivation that is present on most standard dice. Silicon nitride protects the dice surface from scratches by its hard and dense properties. The passivation on Linear Technology's Rad Hard dice is silicon dioxide which is much "softer" than silicon nitride. During the visual and preparation for shipment, ESD safe Tweezers are used and only the edge of the die are touched.

LTC recommends that dice handling be performed with extreme care so as to protect the die surface from scratches. If the need arises to move the die in or out of the chip shipment tray (waffle pack), use an ESD-Safe-Plastic-tipped Bent Metal Vacuum Probe, preferably .020" OD x .010" ID (for use with tiny parts). The wand should be compatible with continuous air vacuums. The tip material should be static dissipative Delrin (or equivalent) plastic.

During die attach, care must be exercised to ensure no tweezers, or other equipment, touch the top of the dice.

3.4 The Absolute Maximum Ratings:

| | |
|---|---|
| Power Dissipation | Internally Limited |
| Input to Output Voltage Differential | 25V |
| Operating Junction Temperature Range | |
| Control Section | -55°C to +150°C |
| Power Transistor | -55°C to +200°C |
| Storage Temperature Range | -65°C to +150°C |
| Lead Temperature (Soldering, 10 sec) | 300°C |

3.5 Design, Construction, and Physical Dimensions: Detail design, construction, physical dimensions, and electrical requirements shall be specified herein.

3.6 Outline Dimensions and Pad Functions: Dice outline dimensions, pad functions, and locations shall be specified in **Figure 1**.

3.7 Radiation Hardness Assurance (RHA):

3.7.1 The manufacturer shall perform a lot sample test as an internal process monitor for total dose radiation tolerance. The sample test is performed with MIL-STD-883 TM1019 Condition A as a guideline..

3.7.2 For guaranteed radiation performance to MIL-STD-883, Method 1019, total dose irradiation, the manufacturer will provide certified RAD testing and report through an independent test laboratory when required as a customer purchase order line item.

3.7.3 Total dose bias circuit is specified in **Figure 2**.

3.8 Wafer (or Dice) Probe: Dice shall be 100% probed at Ta = +25°C to the limits shown in **Table I** herein. All reject dice shall be removed from the lot. This testing is normally performed prior to dicing the wafer into chips. Final specifications after assembly are sample tested during the element evaluation.

3.9 Wafer Lot Acceptance: Wafer lot acceptance shall be in accordance with MIL-PRF-38535, Appendix A, except for the following: Top side glassivation thickness shall be a **minimum of 4KÅ.**

3.10 Wafer Lot Acceptance Report: SEM is performed per MIL-STD-883, Method 2018. Copies of SEM photographs shall be supplied with the Wafer Lot Acceptance Report as part of a Space Data Pack when specified as a customer purchase order line item.

3.11 Traceability: Wafer Diffusion Lot and Wafer traceability shall be maintained through Quality Conformance Inspection.

4.0 QUALITY CONFORMANCE INSPECTION: Quality Conformance Inspection shall consist of the tests and inspections specified herein.

5.0 SAMPLE ELEMENT EVALUATION: A sample from **each wafer supplying dice** shall be assembled and subjected to element evaluation per **Table III** herein.

5.1 100 Percent Visual Inspection: All dice supplied to this specification shall be inspected in accordance with MIL-STD-883, Method 2010, Condition A. All reject dice shall be removed from the lot.

5.2 Electrical Performance Characteristics for Element Evaluation: The electrical performance characteristics shall be as specified in **Table I** and **Table II** herein.

5.3 Sample Testing: Each wafer supplying dice for delivery to this specification shall be subjected to element evaluation sample testing. No dice shall be delivered until all the lot sample testing has been performed and the results found to be acceptable unless the customer supplies a written approval for shipment prior to completion of wafer qualification as specified in this specification.

5.4 Part Marking of Element Evaluation Sample Includes**:**

5.4.1 LTC Logo

5.4.2 LTC Part Number

5.4.3 Date Code

5.4.4 Serial Number

5.4.5 ESD Identifier per MIL-PRF-38535, Appendix A

5.4.6 Diffusion Lot Number

5.4.7 Wafer Number

5.5 Burn-In Requirement: Burn-In circuit for TO39 package is specified in **Figure 3** and Burn-In circuit for TO3 package is specified in **Figure 4.**

5.6 Mechanical/Packaging Requirements: Case Outline and Dimensions are in accordance with **Figure 5** and **Figure 6.**

5.7 Terminal Connections: The terminal connections shall be as specified in **Figure 7** and **Figure 8.**

5.8 Lead Material and Finish: The lead material and finish shall be Kovar for device option 1 and Alloy 52 for device option 2, with hot solder dip (Finish letter A) in accordance with MIL-PRF-38535.

6.0 VERIFICATION (QUALITY ASSURANCE PROVISIONS)

6.1 Quality Assurance Provisions: Quality Assurance provisions shall be in accordance with MIL-PRF-38535. Linear Technology is a QML certified company and all Rad Hard candidates are assembled on qualified Class S manufacturing lines.

6.2 Sampling and Inspection: Sampling and Inspection shall be in accordance with **Table III** herein.

6.3 Screening: Screening requirements shall be in accordance with **Table III** herein.

6.4 Source Inspection:

6.4.1 The manufacturer will coordinate Source Inspection at wafer lot acceptance and pre-seal internal visual.

6.4.2 The procuring activity has the right to perform source inspection at the supplier's facility prior to shipment for each lot of deliverables when specified as a customer purchase order line item. This may include wafer lot acceptance, die visual, and final data review.

6.5 Deliverable Data: Deliverable data that will ship with devices when a Space Data Pack is ordered:

6.5.1 Lot Serial Number Sheets identifying all Canned Sample devices accepted through final inspection by serial number.

6.5.2 100% attributes (completed element evaluation traveler).

6.5.3 Element Evaluation variables data, including Burn-In and Op Life

6.5.4 SEM photographs (3.10 herein)

6.5.5 Wafer Lot Acceptance Report (3.9 herein)

6.5.6 A copy of outside test laboratory radiation report if ordered

6.5.7 Certificate of Conformance certifying that the devices meet all the requirements of this specification and have successfully completed the mandatory tests and inspections herein.

Note: Items 6.5.1 and 6.5.7 will be delivered as a minimum, with each shipment.

7.0 Packaging Requirements: Packaging shall be in accordance with Appendix A of MIL-PRF-38535. All dice shall be packaged in multicavity containers composed of conductive, anti-static, or static dissipative material with an external conductive field shielding barrier.

## DICE OUTLINE DIMENSIONS AND PAD FUNCTIONS
## OPTION 1, RH1086BHK, 0.5A DICE AND OPTION 2, RH1086BKK, 1.5A DICE

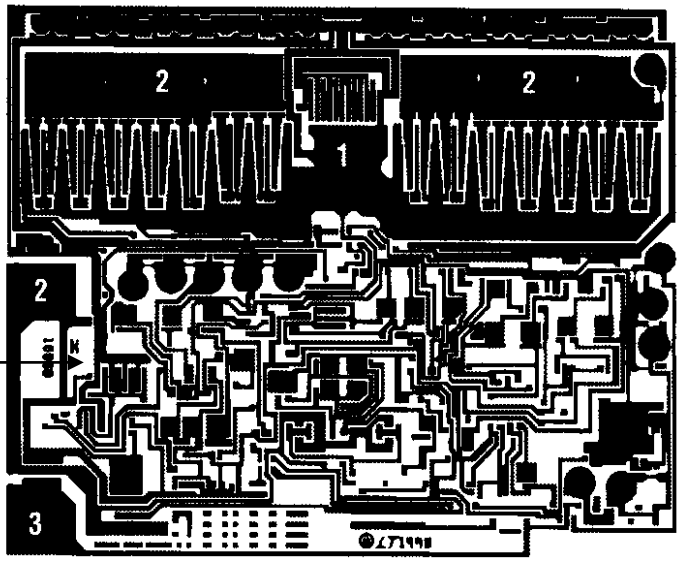


**PAD FUNCTION**

1. $V_{IN}$
2. $V_{OUT}$
3. ADJUST

Connect Backside Substrate to Pad #2

**"H" OR "K" (DEPENDING ON THE DEVICE OPTION) WILL BE REFLECTED HERE**

**FIGURE 1**

## TOTAL DOSE BIAS CIRCUIT

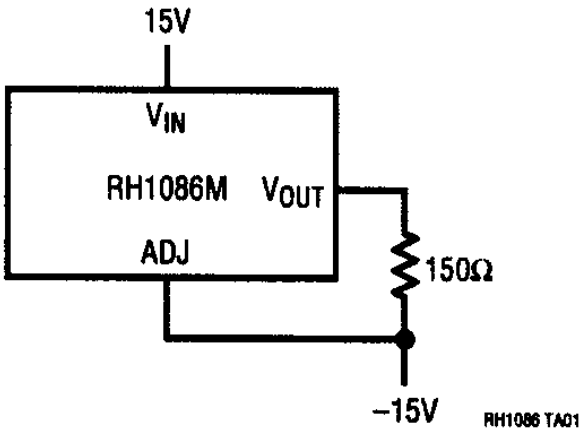


**FIGURE 2**

## TO39 STATIC BURN-IN CIRCUIT
## OPTION 1, T039 METAL CAN / 3 LEADS

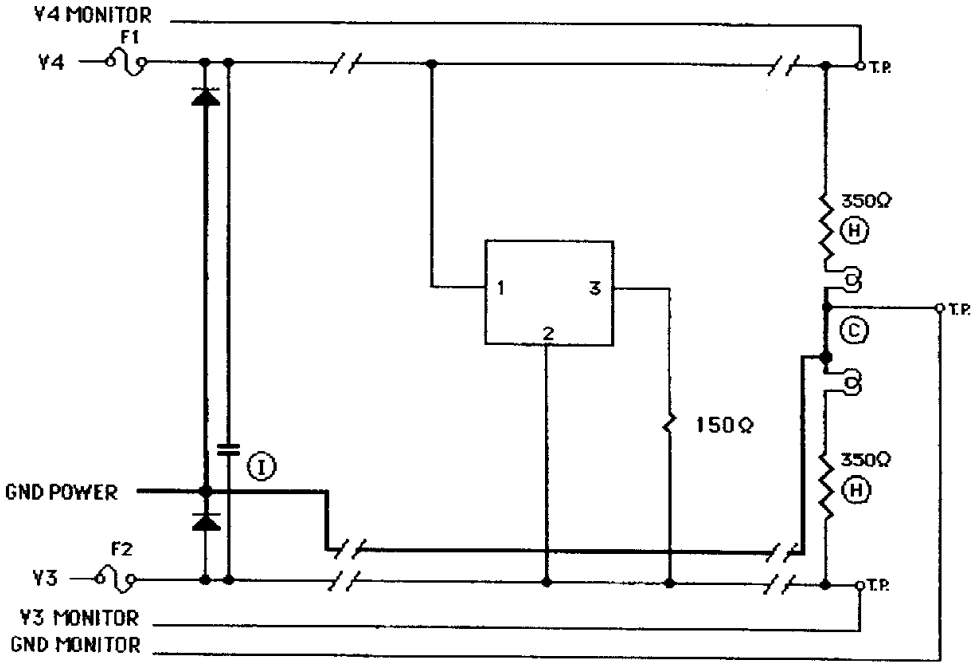


NOTES:

1. Unless otherwise specified, component tolerances shall be per military specification.
2. Tj = 174°C maximum.
3. Ta = 125°C.
4. Burn-in Voltages: V4 = +15V to +16.5V
   V3 = -15V to -16.5V

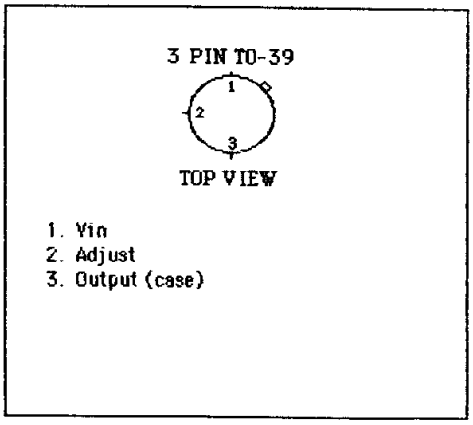


PACKAGE AND PINOUT

**FIGURE 3**

**STATIC BURN-IN CIRCUIT**
**OPTION #2, TO3 / 2 LEADS**

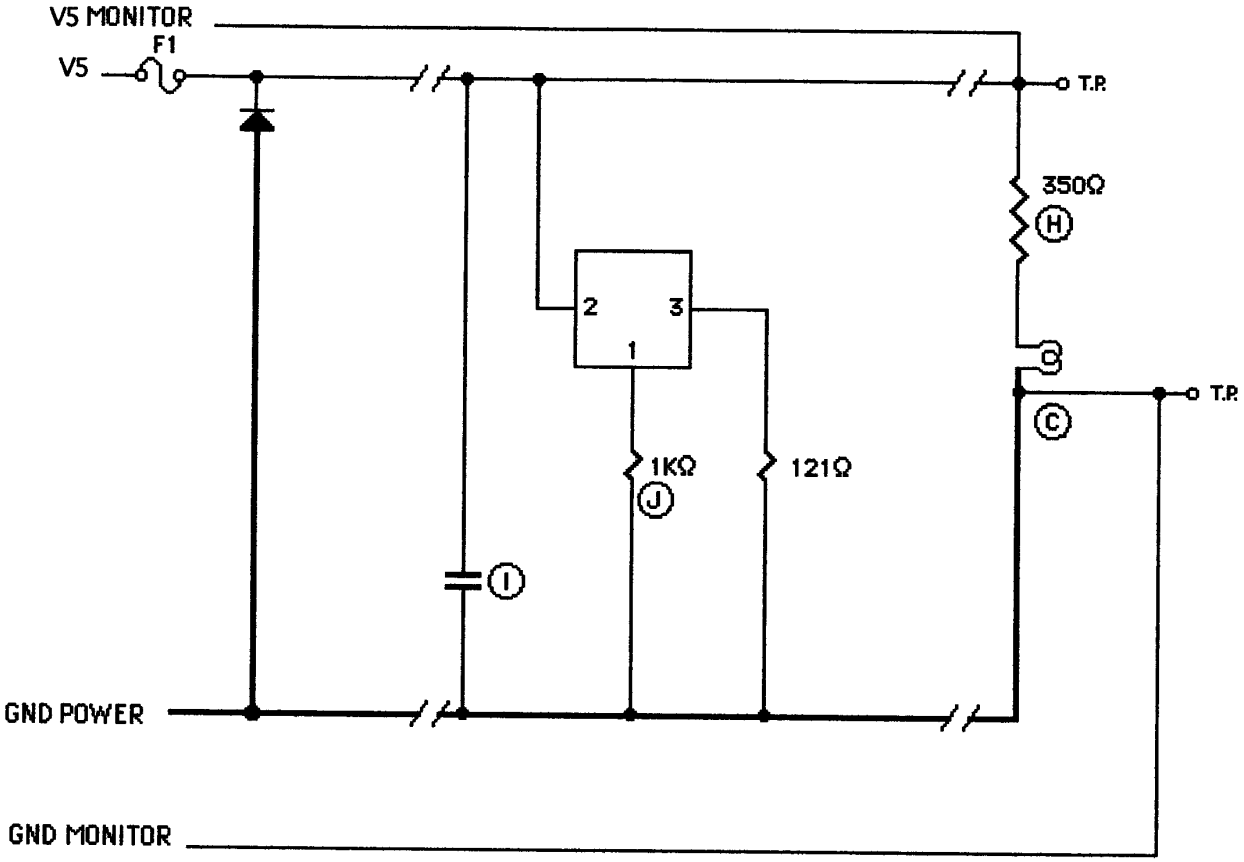


NOTES:

Unless otherwise specified, component tolerances shall be per military specification.

For RH1086:
Burn-In Voltage to be V5 = +23V to +25V
Tj = 168 °C max at Ta of 150 °C.
Tj = 143 °C max at Ta of 125 °C.

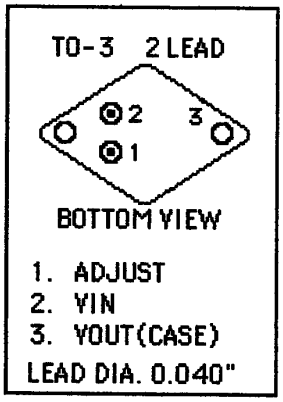


PACKAGE AND PINOUT

**FIGURE 4**

**DEVICE OPTION # 1**
**(H) TO39 METAL CAN / 3 LEADS CASE OUTLINE**

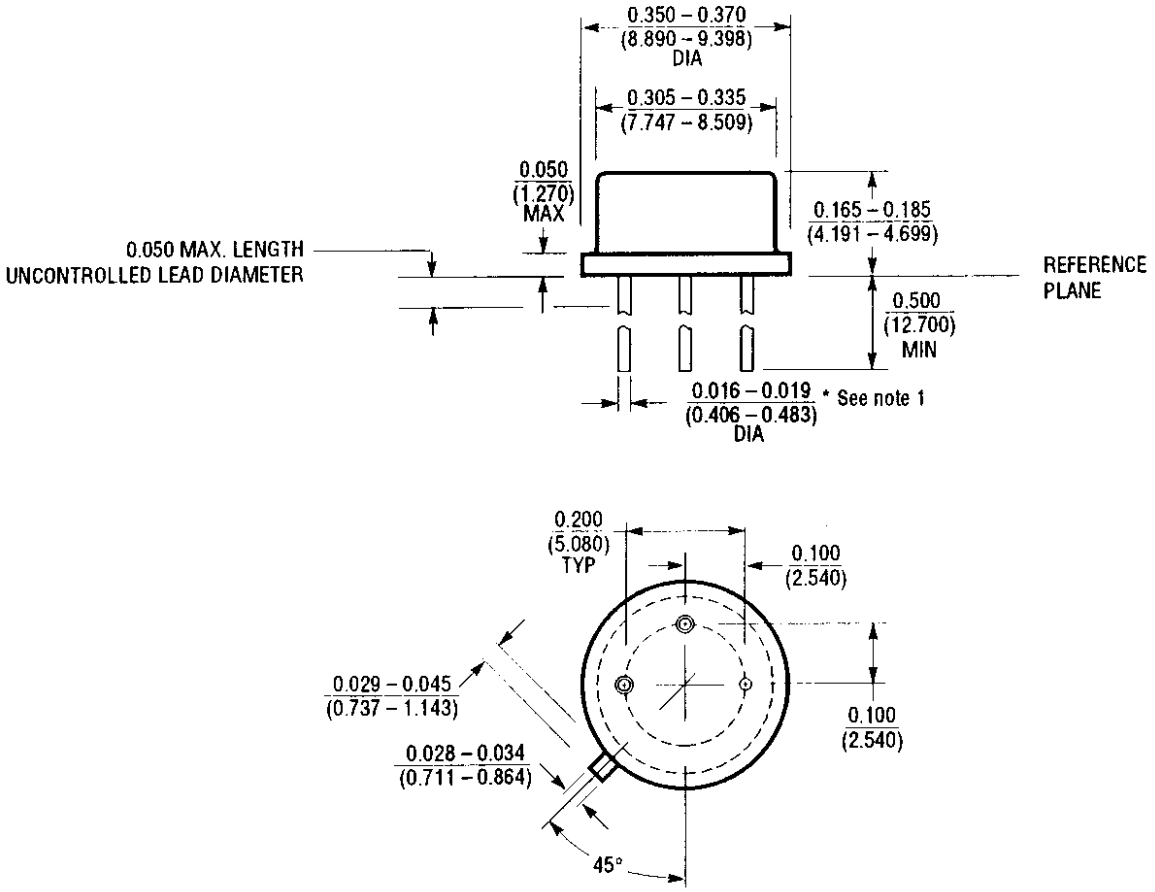


NOTE: 1. FOR SOLDER DIP LEAD FINISH, LEAD DIAMETER IS $\frac{0.016 - 0.024}{(0.406 - 0.610)}$

**FIGURE 5**

$\theta ja$ = +150°C/W
$\theta jc$ = +40°C/W

**DEVICE OPTION # 2**
**(K) TO3 METAL CAN / 2 LEADS CASE OUTLINE**

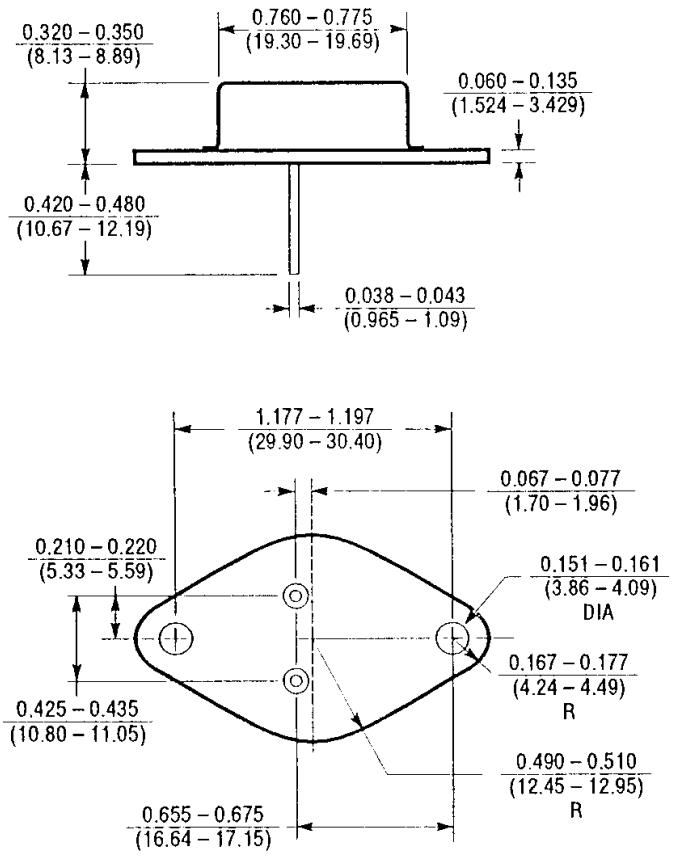


θja = +35°C/W
θjc = +3°C/W

**FIGURE 6**

## TERMINAL CONNECTIONS
## DEVICE OPTION #1, TO39 / 3 LEAD METAL CAN

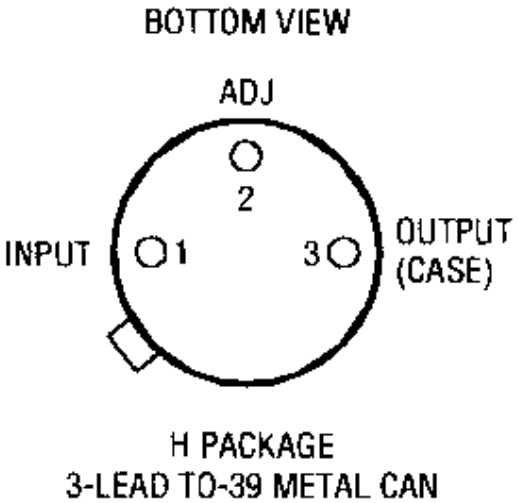


**FIGURE 7**

## DEVICE OPTION #2, TO3 / 2 LEAD METAL CAN

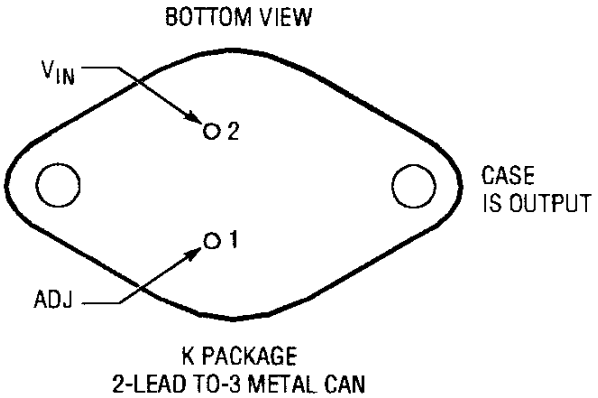


**FIGURE 8**

## TABLE I DICE ELECTRICAL CHARACTERISTICS – Element Evaluation (Note 1)

| PARAMETER | CONDITIONS | RH1086K (Note 6) MIN | RH1086K (Note 6) MAX | RH1086H (Note 6) MIN | RH1086H (Note 6) MAX | UNITS |
|---|---|---|---|---|---|---|
| Reference Voltage | $I_{OUT}$ = 10mA, $T_J$ = 25°C, ($V_{IN} - V_{OUT}$) = 3V | 1.238 | 1.262 | | | V |
| | 1.5V ≤ ($V_{IN} - V_{OUT}$) = 15V | 1.225 | 1.270 | 1.225 | 1.270 | V |
| Line Regulation | $I_{LOAD}$ = 10mA, 1.5V ≤ ($V_{IN} - V_{OUT}$) ≤ 15V<br>$T_J$ = 25°C | | 0.2 | | 0.2 | % |
| Load Regulation | ($V_{IN} - V_{OUT}$) = 3V, 10mA ≤ $I_{OUT}$ ≤ 1.5A<br>$T_J$ = 25°C (0.5A for RH1086H)<br>(Notes 1, 2, 5, 6) | | 0.3 | | 0.3 | % |
| Dropout Voltage ($V_{IN} - V_{OUT}$) | $\Delta V_{OUT}$, $\Delta V_{REF}$ = 1%, $I_{OUT}$ = 1.5A<br>(0.5A for RH1086H) (Notes 3, 5, 6) | | 1.5 | | 1.25 | V |
| Current Limit | ($V_{IN} - V_{OUT}$) = 5V | 1.5 | | 0.5 | | A |
| | ($V_{IN} - V_{OUT}$) = 25V (Note 5) | 0.050 | | 0.020 | | A |
| Mininum Load Current | ($V_{IN} - V_{OUT}$) = 25V (Note 4) | | 10 | | 10 | mA |
| Ripple Rejection | f = 120Hz, $C_{OUT}$ = 25µF Tantalum<br>$I_{OUT}$ = 1.5A, ($I_{OUT}$ = 0.5A for RH1086H)<br>$C_{ADJ}$ = 25µF, ($V_{IN} - V_{OUT}$) = 3V (Note 5, 6) | 60 | | 60 | | dB |
| Adjust Pin Current | $T_J$ = 25°C | | 120 | | 120 | µA |
| Adjust Pin Current Change | 10mA ≤ $I_{OUT}$ ≤ 1.5A (0.5A for RH1086H)<br>1.5V ≤ ($V_{IN} - V_{OUT}$) ≤ 15V (Note 5, 6) | | 5 | | 5 | µA |

**Note 1:** See thermal regulation specifications for changes in output voltage due to heating effects. Load and line regulation are measured at a constant junction temperature by low duty cycle pulse testing. Load regulation is measured at the output lead ≈ 1/8" from the package.

**Note 2:** Line and load regulation are guaranteed up to the maximum power dissipation of 15W for the RH1086K, 3W for the RH1086H. Power dissipation is determined by the input/output differential and the output current. Guaranteed maximum power dissipation will not be available over the full input/output voltage range. See Short Circuit Current Curve in the LT1086 Series standard data sheet for available output current.

**Note 3:** Dropout voltage is specified over the full output current range of the device. Test points and limits are shown on the Dropout Voltage Curve in the LT1086 Series standard data sheet.

**Note 4:** Minimum load current is defined as the minimum output current required to maintain regulation. At 25V input/output differential the device is guaranteed to regulate if the output current is greater than 10mA.

**Note 5:** Guaranteed by design but not tested at wafer sort.

**Note 6:** For compliance with 883 revision C current density spec. RH1086K is derated to 1.0A max load operation.

## TABLE II ELECTRICAL CHARACTERISTICS (POSTIRRADIATION)

**$T_A$ = 25°C unless otherwise noted.**

| PARAMETER | CONDITIONS | 10KRAD (Si) MIN | 10KRAD (Si) MAX | 20KRAD (Si) MIN | 20KRAD (Si) MAX | 50KRAD (Si) MIN | 50KRAD (Si) MAX | 100KRAD (Si) MIN | 100KRAD (Si) MAX | 200KRAD (Si) MIN | 200KRAD (Si) MAX | UNITS |
|---|---|---|---|---|---|---|---|---|---|---|---|---|
| Reference Voltage (Note 6) | $I_{OUT}$ = 10mA ($V_{IN} - V_{OUT}$) = 3V (K) | 1.234 | 1.262 | 1.230 | 1.262 | 1.225 | 1.262 | 1.220 | 1.262 | 1.205 | 1.262 | V |
| | 10mA ≤ $I_{OUT}$ ≤ $I_{FULL\ LOAD}$<br>1.5V ≤ ($V_{IN} - V_{OUT}$) ≤ 15V | 1.220 | 1.275 | 1.219 | 1.275 | 1.215 | 1.275 | 1.210 | 1.275 | 1.20 | 1.275 | V |
| Line Regulation (Notes 2, 3) | $I_{OUT}$ = 10mA<br>1.5V ≤ ($V_{IN} - V_{OUT}$) ≤ 15V | | 0.2 | | 0.21 | | 0.23 | | 0.25 | | 0.3 | % |
| Load Regulation (Notes 2, 3, 6) | ($V_{IN} - V_{OUT}$) = 3V<br>10mA ≤ $I_{OUT}$ ≤ $I_{FULL\ LOAD}$ | | 0.3 | | 0.3 | | 0.3 | | 0.3 | | 0.3 | % |
| Dropout Voltage (Note 4) | $\Delta V_{REF}$ = 1%, $I_{OUT}$ = 1.5A (K)<br>$\Delta V_{REF}$ = 1%, $I_{OUT}$ = 0.5A (H) | | 1.5<br>1.25 | | 1.51<br>1.26 | | 1.52<br>1.27 | | 1.55<br>1.29 | | 1.575<br>1.32 | V<br>V |
| Current Limit | ($V_{IN} - V_{OUT}$) = 5V (K)<br>($V_{IN} - V_{OUT}$) = 25V (K)<br>($V_{IN} - V_{OUT}$) = 5V (H)<br>($V_{IN} - V_{OUT}$) = 25V (H) | 1.5<br>0.05<br>0.5<br>0.020 | | 1.5<br>0.049<br>0.5<br>0.019 | | 1.5<br>0.048<br>0.5<br>0.019 | | 1.5<br>0.047<br>0.5<br>0.018 | | 1.5<br>0.045<br>0.5<br>0.017 | | A<br>A<br>A<br>A |
| Minimum Load Current | ($V_{IN} - V_{OUT}$) = 25V | | 10 | | 10 | | 10 | | 10 | | 10 | mA |
| Adjust Pin Current | | | 120 | | 120 | | 120 | | 120 | | 120 | µA |
| Adjust Pin Current Change (Note 6) | 10mA ≤ $I_{OUT}$ ≤ $I_{FULL\ LOAD}$<br>1.5V ≤ ($V_{IN} - V_{OUT}$) ≤ 15V | | 5 | | 5 | | 5 | | 5 | | 5 | µA |

**Note 1:** Stresses beyond those listed under Absolute Maximum Ratings may cause permanent damage to the device. Exposure to any Absolute Maximum Rating condition for extended periods may affect device reliability and lifetime.

**Note 2:** See thermal regulation specifications for changes in output voltage due to heating effects. Line and load regulation are measured at a constant junction temperature by low duty cycle pulse testing.

**Note 3:** Line and load regulation are guaranteed up to the maximum power dissipation of 15W for RH1086MK and 3W for the RH1086MH. Power dissipation is determined by the input/output differential voltage and the output current. Guaranteed maximum power dissipation will not be available over the full input/output voltage range.

**Note 4:** Dropout voltage is specified over the full output current range of the device. Test points and limits are shown on the Dropout Voltage curve in the LT®1086 data sheet.

**Note 5:** Guaranteed by design, characterization, or correlation to other tested parameters.

**Note 6:** $I_{FULL\ LOAD}$ is defined in the Current Limit curves in the standard data sheet. For compliance with 883 revision C current density specifications, the RH1086MK is derated to 1A.

# TABLE III RH ELEMENT EVALUATION TABLE QUALLIFICATION OF DICE SALES

LINEAR TECHNOLOGY

RH CANNED SAMPLE TABLE FOR QUALIFYING DICE SALES

| SUBGROUP | CLASS K/S | CLASS H/B | OPERATION | MIL-STD-883 METHOD | MIL-STD-883 CONDITION | QUANTITY (ACCEPT NUMBER) |
|---|---|---|---|---|---|---|
| 1 | X | | SEM | 2018 | N/A | REF. METHOD 2018 FOR S/S |
| 2 | X | X | ELEMENT ELECTRICAL (WAFER SORT @ 25°C) | | | 100% |
| 3 | X | X | ELEMENT VISUAL (2nd OP) | 2010 | A | 100% |
| 4 | X | X | INTERNAL VISUAL (3rd OP) | 2010 | A | ASSEMBLED PARTS ONLY |
| | X | | DIE SHEAR MONITOR | 2019 | | |
| | X | | BOND PULL MONITOR | 2011 | | |
| 5 | X | | STABILIZATION BAKE | 1008 | C | ASSEMBLED PARTS ONLY |
| | X | | TEMPERATURE CYCLE | 1010 | C | |
| | X | | CONSTANT ACCELERATION | 2001 | E | |
| | X | | FINE LEAK | 1014 | A | |
| | X | | GROSS LEAK | 1014 | C | |
| 6 | X | | FIRST ROOM ELECTRICAL - READ & RECORD (REPLACE ANY ASSEMBLY-RELATED REJECTS) | | | **65 (3)** |
| | X | | ELECT. READ & RECORD @ +125°C or +150°C, -55°C | | | |
| | X | | BURN-IN: +125°C/240 hrs. or +150°C/120 hrs. | 1015 | +125°C MINIMUM 240 HOURS | |
| | X | | POST BURN-IN ELECTRICAL @ 25°C READ & RECORD | | | |
| | X | | PRE OP-LIFE ELECTRICAL @ 25°C READ & RECORD | | | |
| | X | | OPERATING LIFE: +125°C/1000 hrs. or +150°C/500 hrs. | 1005 | +125°C MINIMUM 1000 HOURS | |
| | X | | POST OP-LIFE ELECT. (R&R 25°C, +125°C or +150°C, -55°C) | | | |
| 7 | X | X | WIRE BOND EVALUATION | 2011 | | 15 (0) or 25 (1) - # of wires |

NOTE: LTC is not qualified to process to MIL-PRF-38534. This is an LTC imposed element evaluation that follows MIL-STD-883 test methods and conditions. Please note the quantity and accept number from a Sample Size Series of 10%, accept on 3, and note that the actual sample and accept number does not begin until Subgroup 6.

NOTE: Tests within Subgroup 5 may be performed in any sequence.

NOTE: LTC's radiation tolerant (RH) die has a topside glassivation thickness of 4KÅ minimum.

NOTE: Sample sizes on the travelers may be larger than that indicated in the above table; however, the larger sample size is to accommodate extra units for replacement devices in the event of equipment or operator error and for assembly related rejects in Subgroup 6, and for Wire Bond Evaluation, Subgroup 7. The larger sample size is at all times kept segregated and, if used for qualification, has all the required processing imposed.

05/22/13